PROGRAMMABLE DC TRANSMITTER

FEATURES

- Field-rangeable. Wide switchable input ranges 10mV to 200V/200μA to 50mA, wide switchable output ranges over 20 standard process signals
- Accuracy 0.1% F.S.
- Input/output isolation 1.6KVdc

1. MODEL: PF - ▭ - ▭▭ ▭ - ▭ - N → Non-programmable

DAP	Non-Isolating (input/output)
DBP	Isolating (input/output)

NO	Input Ranges Voltage		NO	Input Ranges Current		NO	Output Ranges Voltage / Current	NO	Aux. Power
10	0 ~ 10	mV	30	0 ~ 200	μA	A	0 ~ 0.5V	1	AC 110V (50/60Hz)
11	0 ~ 20	mV	31	0 ~ 500	μA	B	0 ~ 1V	2	AC 220V (50/60Hz)
12	0 ~ 50	mV	32	0 ~ 1	mA	C	0 ~ 2V	3	DC 24V
13	0 ~ 100	mV	33	0 ~ 2	mA	D	0 ~ 4V	4	DC 48V
14	0 ~ 200	mV	34	0 ~ 5	mA	E	0 ~ 5V	5	DC 110V
15	0 ~ 500	mV	35	1 ~ 5	mA	F	1 ~ 5V	6	DC 220V
16	0 ~ 1	V	36	0 ~ 10	mA	G	0 ~ 8V	7	AC 90~260V
17	-1 ~ +1	V	37	2 ~ 10	mA	H	0 ~ 10V	9	SPECIFIED
18	0 ~ 2	V	38	0 ~ 20	mA	I	2 ~ 10V		
19	0 ~ 5	V	39	4 ~ 20	mA	J	0 ~ 1mA		
20	1 ~ 5	V	40	0 ~ 50	mA	K	0 ~ 2mA		
21	-5 ~ +5	V	41	10 ~ 50	mA	L	0 ~ 5mA		
22	0 ~ 10	V	42	20 ~ 4	mA	M	1 ~ 5mA		
23	2 ~ 10	V	43	50 ~ 10	mA	N	0 ~ 10mA		
24	-10 ~ +10	V	44	*4 ~ 20	mA	O	0 ~ 16mA		
25	0 ~ 20	V	99	SPECIFIED		P	0 ~ 20mA		
26	0 ~ 100	V				Q	4 ~ 20mA		
27	0 ~ 200	V				R	SPECIFIED		

* exciting DC 24V (two wire)
• 20~4mA & 50~10mA be reversed of input connection

- ±20% of rate, less 2.5VA for AC input
- ±20% of rate, less 2WATT for DC input
- Switchable 110V/220V by jump internally
- Less 2.5VA for AC switching input

2. Specification

- Accuracy : 0.1% F.S. (23±5°C)
- Output ripple (p-p) : <0.1% F.S.
- Temp. coefficient : 100ppm/°C (0-50°C)
- Input resistance : ≥100MΩ (≤ 2V ranges)
  ≥1MΩ (> 2V ranges)
  ≤20Ω (current input)
- Maximum input : ≥300 Vrms (> 2V ranges)
  ≤150 Vrms (≤ 2V ranges)
  ≤150 mA (current input)
- Dielectric strength : 1.5KVac / 1min. (power/input / output)
  1600Vdc (input/output)
- Output drive capability : ≤10mA for voltage mode
  ≤10V for current mode
- Response time : ≤250 ms (0-90%)
- Operating condition : 0~55°C (20 to 95% RH non-condensed)
- Storage condition : 0~70°C (20 to 95% RH non-condensed)
- Construction : Socket/plug-in type with barrier terminals

3. Function switches (S1, S2, S3, S4)

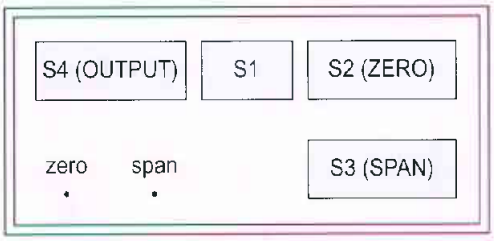

• S1 → P_1-P_2-P_3 input range selection
P_4 input offset polarity selection

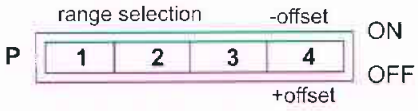

POUNDFUL

Effective input range D	S1 pole 1 - 2 - 3	Pregain G
200 V ≥ D > 20 V	0 - 1 - 1	0.01
20 V ≥ D > 2 V	0 - 0 - 1	0.1
2 V ≥ D > 200 mV	0 - 0 - 0	1
200 mV ≥ D > 20 mV	1 - 0 - 1	10
20 mV ≥ D > 2 mV	1 - 0 - 0	100
50 mA ≥ D > 5 mA	1 - 1 - 1	1
5 mA ≥ D > 500 μA	1 - 0 - 1	10
500 μA ≥ D > 50 μA	1 - 0 - 0	100

(Status —— P1-P2-P3 – on = 1; off=0)

• S2 → Input range offset (ZERO) selection

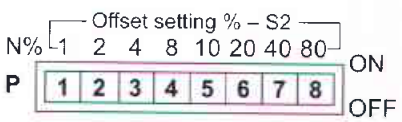

Status off =enable
All poles off ∑N=165%
All poles on ∑N=0%

• S3 → Input range offset (GAIN) selection

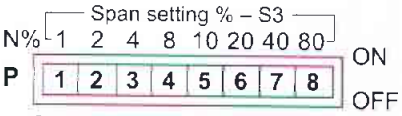

Status off =enable
All poles off ∑N=165%
All poles on ∑N=0%

• S4 → P_1-P_2-P_3-P_5-P_6- output range selection
P_7-P_8 output mode: voltage/current selection
★ (ref. output switching table)

4. Programming formula

VH/VL, AH/AL: input high / input low; G: pregain

Voltage mode unit: volt	Current mode unit: mA
• Span → X=[10/G (VH-VL)]%	• Span → X=[500/G (AH-AL)]%
• Offset → Y=[100 x G x VL)]%	• Offset → Y=[2G x AL)]%

★ Note: 1. Range selection: IVH-VLI should be ≥ 0.1 IVHI limited of pregain & range selection
2. Solution of non-linear problem: at input span IVH-VLI ≤ 0.2 IVHI, at normal setting switching calibration, if non-linear happened, shifting offset switches up or down 1-2%, recalibrating to obtain correct output.

5. Output switching table: See other transmitter Output switching table

6. Input switching table (S1, S2, S3)

(switching status 1 = on; 0 = off; X = don't care)

Input Range	S2 (ZERO) 1-2-3-4--6-7-8	S3(SPAN) 1-2-3-4-5-6-7-8	S1 1-2-3-4
0~10 mV	1-1-1-1-1-1-1-1	1-1-1-1-0-1-1-1	1-0-0-X
0~20 mV	1-1-1-1-1-1-1-1	0-1-0-1-1-1-1-1	1-0-0-X
0~50 mV	1-1-1-1-1-1-1-1	1-1-1-1-1-0-1-1	1-0-1-X
0~100 mV	1-1-1-1-1-1-1-1	1-1-1-1-0-1-1-1	1-0-1-X
0~200 mV	1-1-1-1-1-1-1-1	0-1-0-1-1-1-1-1	1-0-1-X
0~500 mV	1-1-1-1-1-1-1-1	1-1-1-1-1-0-1-1	0-0-0-X
0~1 V	1-1-1-1-1-1-1-1	1-1-1-1-0-1-1-1	0-0-0-X
-1~1 V	1-1-1-1-1-0-1-0	0-1-0-1-1-1-1-1	0-0-0-0
0~2 V	1-1-1-1-1-1-1-1	0-1-0-1-1-1-1-1	0-0-0-X
0~5 V	1-1-1-1-1-1-1-1	1-1-1-1-1-0-1-1	0-0-1-X
1~5 V	1-1-1-1-0-1-1-1	0-1-0-1-1-0-1-1	0-0-1-1
-5~5 V	1-1-1-1-0-1-0-1	1-1-1-1-0-1-1-1	0-0-1-0
0~10 V	1-1-1-1-1-1-1-1	1-1-1-1-0-1-1-1	0-0-1-X
2~10 V	1-1-1-1-1-0-1-1	0-0-1-1-0-1-1-1	0-0-1-1
-10~10 V	1-1-1-1-1-0-1-0	0-1-0-1-1-1-1-1	0-0-1-0
0~20 V	1-1-1-1-1-1-1-1	0-1-0-1-1-1-1-1	0-0-1-X
0~50 V	1-1-1-1-1-1-1-1	1-1-1-1-1-0-1-1	0-1-1-X
0~100 V	1-1-1-1-1-1-1-1	1-1-1-1-0-1-1-1	0-1-1-X
0~200 V	1-1-1-1-1-1-1-1	0-1-0-1-1-1-1-1	0-1-1-X
0~0.2 mA	1-1-1-1-1-1-1-1	0-1-0-1-1-0-1-1	1-0-0-X
0~0.5 mA	1-1-1-1-1-1-1-1	1-1-1-1-0-1-1-1	1-0-0-X
0~1 mA	1-1-1-1-1-1-1-1	1-1-1-1-0-1-0-1	1-0-1-X
0~2 mA	1-1-1-1-1-1-1-1	0-1-0-1-1-0-1-1	1-0-1-X
0~5 mA	1-1-1-1-1-1-1-1	1-1-1-1-0-1-1-1	1-0-1-X
1~5 mA	1-1-1-1-1-0-1-1	0-0-1-1-0-1-1-1	1-0-1-1
0~10 mA	1-1-1-1-1-1-1-1	1-1-1-1-0-1-0-1	1-1-1-X
2~10 mA	1-1-0-1-1-1-1-1	0-0-1-1-1-0-0-1	1-1-1-1
0~20 mA	1-1-1-1-1-1-1-1	0-1-0-1-1-0-1-1	1-1-1-X
4~20 mA	1-1-1-0-1-1-1-1	0-1-1-1-0-0-1-1	1-1-1-1
10~50 mA	1-1-1-1-1-0-1-1	0-0-1-1-0-1-1-1	1-1-1-1
*20~4 mA	1-1-1-1-1-1-0-1	0-1-1-1-0-0-1-1	1-1-1-0
*50~10 mA	1-1-1-1-1-0-1-0	0-0-1-1-0-1-1-1	1-1-1-0

• 20~4 & 50~10 mA be reversed of input connection

7. Terminal connection

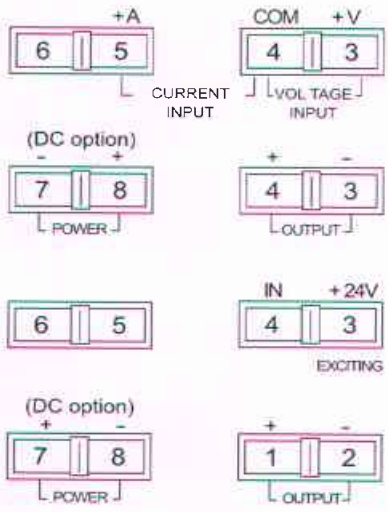

(PF-DAP (DBP)-44 only)

8. Dimension: See other transmitter dimension

PROGRAMMABLE AC TRANSMITTER

FEATURES

- Field-rangeable switchable input & output ranges
- Accuracy 0.1% F.S.
- Input/output isolation 1.6KVdc

1. MODEL: PF- ■ - ■ ■ - ■ - ■ - N →(Non-programmable)

AA	RMS (isolating)
AB	TRUE RMS (isolating)

• CTB (diode block) is supplied to protect the current transformer from burning when the loop is open

NO	Range	NO	Output Ranges	NO	Aux. Power
1	AC 0-10V	E	DC 0-5 V	1	AC 110V (50/60Hz)
2	AC 0-50V	F	DC 1-5 V	2	AC 220V (50/60Hz)
3	AC 0-150V	H	DC 0-10 V	3	DC 24V
4	AC 0-300V	I	DC 2-10 V	4	DC 48V
5	AC 0-600V	J	DC 0-1 mA	5	DC 110V
6	AC 0-1A	N	DC 0-10 mA	6	DC 220V
7	AC 0-5A	P	DC 0-20 mA	7	AC 90~260V
8	AC 0-10A	Q	DC 4-20 mA	9	SPECIFIED
9	SPECIFIED	R	SPECIFIED		

• ±20% of rate, less 2.5VA for AC input
• ±20% of rate, less 2WATT for DC input
• Switchable 110V/220V by jump internally
• Less 2.5VA for AC switching input

2. Specification

- Accuracy : 0.1% F.S. (TRMS) (23±5°C)
  0.25% F.S. (RMS) (23±5°C)
- Temp. coefficient : 100ppm/°C (0-50°)
- Input burden : ≤0.2VA (ACV); ≤0.2VA (ACA)
- Max. input over : ≤2 x rated continuous (Voltage)
  ≤3 x rated continuous (Current)
- Response time : ≤300ms (0~90%)
- Output ripple (p-p) : <0.1% F.S.
- Dielectric strength : 1.5KVac/1 min. (power/input/output)
- Output drive capability : ≤10mA for voltage mode
  ≤10V for current mode
- Operating condition : 0~55°C (humidity 20~95% RH non-condensed)
- Storage condition : 0~70°C (humidity 20~95% RH non-condensed)
- Construction : Socket/plug-in type with barrier terminals

3. Function switches (S3, S4)

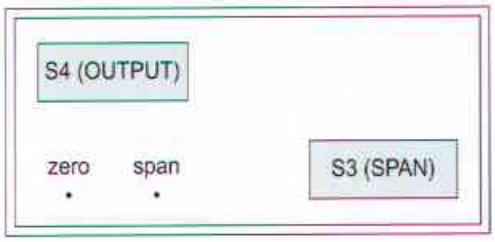

• S3 → Input range offset (GAIN) selection

Span setting % – S3

N%	1	2	4	8	10	20	40	80	
P	1	2	3	4	5	6	7	8	ON / OFF

Status	off =enable
All poles off	∑N=165%
All poles on	∑N=0%

• S4 → P_1-P_2-P_3-P_4-P_5-P_6 output range selection
P_7-P_8 output mode: voltage/current selection
★ (ref. output switching table)

4. Programming formula

Effective input range D	Pregain G	Effective input range D	Pregain G
600V ≥ D > 150V	600	10A ≥ D > 5A	10
150V ≥ D > 50V	150	5A ≥ D > 1A	5
50V ≥ D > 10V	50	10A ≥ D > 5A	1
10V ≥ D > 2V	10		

IH/IL: input high/input low; G: pregain
• SPAN → X= [10G/(IH-IL)]%

POUNDFUL

5. Application

Example : PF-AA-7Q-2

Gain ..... (G = 5)
Input range..... (IH = 5A, IL = 0A)
Output ..... (DC 4-20mA)
Power..... (AC 220V)
• (Span) X = [10 x 5/(5-0)]%
= 10%

• S3 → 1 2 3 4 5 6 7 8 ON / OFF

(P_5-off & the rest on → ΣN=10%)

• S4 → 1 2 3 4 5 6 7 8 ON / OFF

(P_5-P_7-P_8-off & the rest on)

Example : PF-AA-9H-1

Gain ..... (G = 50)
Input range..... (IH = 35V, IL = 0V)
Output ..... (DC 0-10V)
Power..... (AC 110V)
• (Span) X = [10 x 50/(35-0)]%
= 14%

• S3 → 1 2 3 4 5 6 7 8 ON / OFF

(P_3-P_5-off & the rest on → ΣN=14%)

• S4 → 1 2 3 4 5 6 7 8 ON / OFF

(P_3-P_5-P_6-off & the rest on)

6. Input switching table (S3)

(switching status 1 = on; 0 = off)

Input Range	S3 (SPAN) 1-2-3-4-5-6-7-8
AC 0 ~ 10V	1-1-1-1-0-1-1-1
AC 0 ~ 50V	1-1-1-1-0-1-1-1
AC 0 ~ 150V	1-1-1-1-0-1-1-1
AC 0 ~ 300V	1-1-1-1-1-0-1-1
AC 0 ~ 600V	1-1-1-1-0-1-1-1

AC 0 ~ 1A	1-1-1-1-0-1-1-1
AC 0 ~ 5A	1-1-1-1-0-1-1-1
AC 0 ~ 10A	1-1-1-1-0-1-1-1

7. Output switching table (S4)

(switching status 1 = on; 0 = off)

Output Range	O/P Range 1-2-3-4-5-6	O/P Mode 7-8
0 ~ 0.5V	0-1-1-1-1-0	1-1
0 ~ 1V	1-0-1-1-1-0	1-1
0 ~ 2V	1-1-0-1-1-0	1-1
0 ~ 4V	1-1-1-0-1-0	1-1
0 ~ 5V	1-0-1-0-1-0	1-1
1 ~ 5V	1-1-1-0-1-1	1-1
0 ~ 6V	1-1-0-0-1-0	1-1
0 ~ 8V	1-1-1-1-0-0	1-1
0 ~ 10V	1-1-0-1-0-0	1-1
2 ~ 10V	1-1-1-1-0-1	1-1
0 ~ 1mA	0-1-1-1-1-0	0-0
0 ~ 2mA	1-0-1-1-1-0	0-0
0 ~ 5mA	0-1-0-1-1-0	0-0
1 ~ 5mA	1-1-0-1-1-1	0-0
0 ~ 10mA	1-0-1-0-1-0	0-0
2 ~ 10mA	1-1-1-0-1-1	0-0
0 ~ 16mA	1-1-1-1-0-0	0-0
0 ~ 20mA	1-1-0-1-0-0	0-0
4 ~ 20mA	1-1-1-1-0-1	0-0

8. Terminal connection

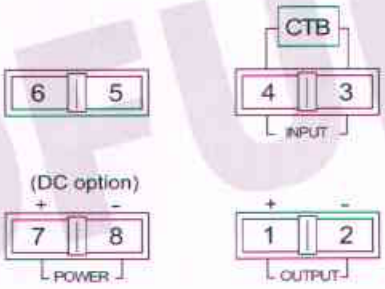

9. Dimension:

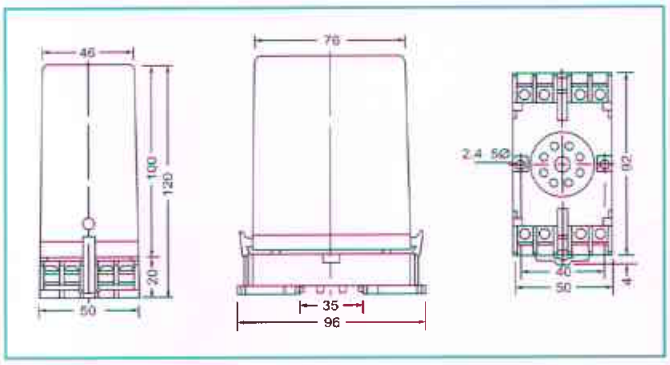

Note: 1. Socket drawing type
2. Mounting: either rail mounting or general screw mounting

SOUNDFUL

PROGRAMMABLE RTD TRANSMITTER

FEATURES

- Field-rangeable switchable input & output ranges
- Accuracy 0.1% F.S.
- Non-linear input with linear DC output
- 3 wires configuration automatically compensating line resistance effects
- Input/output isolation 1.6KVdc

1. MODEL: PF- ■-■■ ■-■-N →(Non-programmable)

PAP	Non-Isolating (input/output)
PBP	Isolating (input/output)

NO	Input Ranges Temperature	NO	Output Ranges	NO	Aux. Power
10	0 ~ 50°C	A	0 - 0.5 V	1	AC 110V (50/60Hz)
11	0 ~ 100°C	B	0 - 1 V	2	AC 220V (50/60Hz)
12	0 ~ 200°C	C	0 - 2 V	3	DC 24V
13	0 ~ 300°C	D	0 - 4 V	4	DC 48V
14	0 ~ 400°C	E	0 - 5 V	5	DC 110V
15	0 ~ 600°C	F	1 - 5 V	6	DC 220V
16	0 ~ 800°C	G	0 - 8 V	7	AC 90~260V
17	-20 ~ +80°C	H	0 - 10 V	9	SPECIFIED
18	-50 ~ +50°C	I	2 - 10 V	• ±20% of rate, less 2.5VA for AC input	
19	-100 ~ +100°C	J	0 - 1 mA		
20	-100 ~ +200°C	K	0 - 2 mA	• ±20% of rate, less 2WATT for DC input	
21	-100 ~ +400°C	L	0 - 5 mA		
22	-100 ~ +800°C	M	1 - 5 mA	• Switchable 110V/220V by jump internally	
23	-200 ~ +200°C	N	0 - 10 mA		
24	-200 ~ +400°C	O	0 - 16 mA	• Less 2.5VA for AC switching input	
25	-200 ~ +800°C	P	0 - 20 mA		
99	SPECIFIED	Q	4 - 20 mA		

2. Specification

- Accuracy : 0.1% F.S. (23±5°C)
- Output ripple (p-p) : <0.1% F.S.
- Temp. coefficient : 100ppm/°C (0-50°)
- Dielectric strength : 1.5KVac/1 min. (power/input/output)
  1600 Vdc (input/output)
- Output drive capability : ≤10mA for voltage mode
  ≤10V for current mode
- Response time : ≤250ms (0~90%)
- Operating condition : 0~55°C (humidity 20~95% RH non-condensed)
- Storage condition : 0~70°C (humidity 20~95% RH non-condensed)
- Construction : Socket/plug-in type with barrier terminals

3. Function switches (S1, S2, S3, S4)

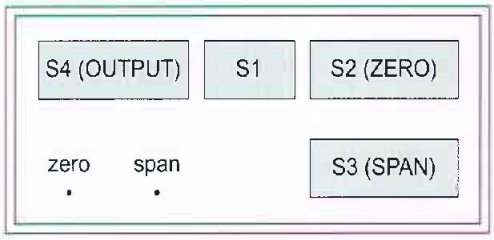

• S1 → Input offset polarity selection

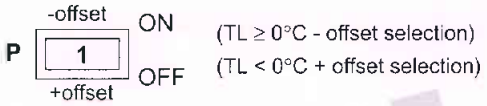

• S2 → Input range offset (ZERO) selection

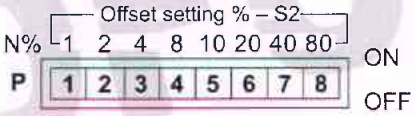

Status	off =enable
All poles off	∑N=165%
All poles on	∑N=0%

• S3 → Input range span (GAIN) selection

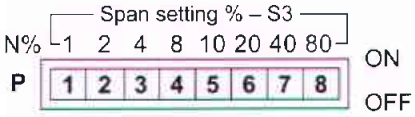

Status	off =enable
All poles off	∑N=165%
All poles on	∑N=0%

• S4 → P_1-P_2-P_3-P_4-P_5-P_6 output range selection
P_7-P_8 output mode: voltage/current selection
★ (ref. output switching table)

POUNDFUL

4. Programming formula

TH/TL: input high / input low

- Span → X = [8000/(TH-TL)]
- Offset → = (TL/2)%

★ Note: 1. Input span ITH-TLI should be ≥ 0.1 ITHI
2. If input ITH-TLI ≤ 0.2 IVHI, at normal setting with calibration, if non-linear happened, shifting offset switches up or down 1-2%, recalibating to obtain correct output.

5. Application

Example : PAP-11 E-1

Input range ..... (TH = 100°C, TL = 0°C)
Output ..... (DC 0-5V)
Power ..... (AC 110V)

- (Span) X = 8000/(100-0) = 80%
- (Offset) Y = 0/2 = 0%

- S1 → P_1 = on/-offset (TL≥0°C)

- S2 → 1 2 3 4 5 6 7 8 ON / OFF
(All poles on → ∑N=0%)

- S3 → 1 2 3 4 5 6 7 8 ON / OFF
(P_8-off & the rest on → ∑N=80%)

6. Input switching table (S1, S2, S3)

(switching status 1 = on; 0 = off)

	S1	S2 (ZERO)	S3 (SPAN)
Input Range	1	1-2-3-4-5-6-7-8	1-2-3-4-5-6-7-8
0 ~ 50°C	X	1-1-1-1-1-1-1-1	1-0-1-0-0-0-0-0
0 ~ 100°C	X	1-1-1-1-1-1-1-1	1-1-1-1-1-1-1-0
0 ~ 200°C	X	1-1-1-1-1-1-1-1	1-1-1-1-1-1-0-1
0 ~ 400°C	X	1-1-1-1-1-1-1-1	1-1-1-1-1-0-1-1
0 ~ 600°C	X	1-1-1-1-1-1-1-1	*0-0-1-1-0-1-1-1
0 ~ 800°C	X	1-1-1-1-1-1-1-1	1-1-1-1-0-1-1-1
-20 ~ 80°C	1	1-1-1-1-0-1-1-1	1-1-1-1-1-1-1-0
-50 ~ 50°C	1	0-1-0-1-1-0-1-1	1-1-1-1-1-1-1-0
-100 ~ 100°C	1	1-1-1-1-0-1-0-1	0-1-1-1-1-1-0-1
-100 ~ 200°C	1	1-1-1-1-0-1-0-1	*0-0-0-1-1-0-1-1
-100 ~ 400°C	1	1-1-1-1-0-1-0-1	0-0-0-1-0-1-1-1
-100 ~ 800°C	1	1-1-1-1-0-1-0-1	*0-1-1-0-1-1-1-1
-200 ~ 200°C	1	1-1-1-1-0-0-1-0	1-1-1-1-1-0-1-1
-200 ~ 400°C	1	1-1-1-1-0-0-1-0	*0-0-1-1-0-1-1-1
-200 ~ 800°C	1	1-1-1-1-0-0-1-0	1-1-1-0-1-1-1-1

* recalibration to obtain linear output

7. Output switching table (S4)

(switching status 1 = on; 0 = off)

Output Range	O/P Range 1-2-3-4-5-6	O/P Mode 7-8
0 ~ 0.5V	0-1-1-1-1-0	1-1
0 ~ 1V	1-0-1-1-1-0	1-1
0 ~ 2V	1-1-0-1-1-0	1-1
0 ~ 4V	1-1-1-0-1-0	1-1
0 ~ 5V	1-0-1-0-1-0	1-1
1 ~ 5V	1-1-1-0-1-1	1-1
0 ~ 6V	1-1-0-0-1-0	1-1
0 ~ 8V	1-1-1-1-0-0	1-1
0 ~ 10V	1-1-0-1-0-0	1-1
2 ~ 10V	1-1-1-1-0-1	1-1
0 ~ 1mA	0-1-1-1-1-0	0-0
0 ~ 2mA	1-0-1-1-1-0	0-0
0 ~ 5mA	0-1-0-1-1-0	0-0
1 ~ 5mA	1-1-0-1-1-1	0-0
0 ~ 10mA	1-0-1-0-1-0	0-0
2 ~ 10mA	1-1-1-0-1-1	0-0
0 ~ 16mA	1-1-1-1-0-0	0-0
0 ~ 20mA	1-1-0-1-0-0	0-0
4 ~ 20mA	1-1-1-1-0-1	0-0

8. Terminal connection

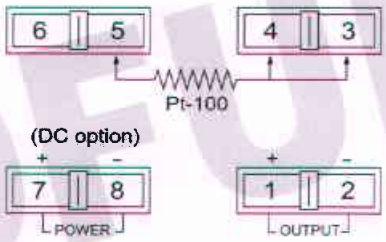

- Note: Two wires application shorting terminals 3 & 4

9. Dimension: (Unit: mm)

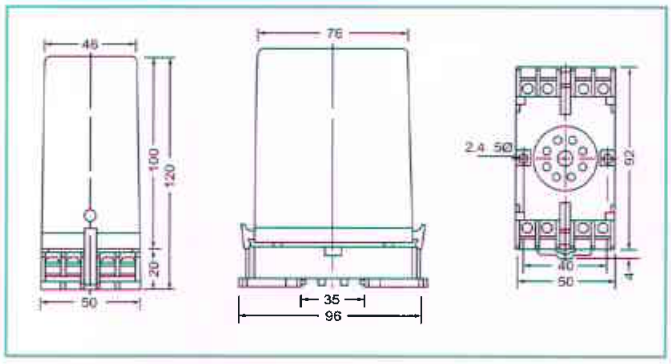

Note: 1. Socket drawing type
2. Mounting: either rail mounting or general screw mounting

POUNDEUL

PROGRAMMABLE POTENTIOMETER TRANSMITTER

FEATURES

- Field-rangeable. Wide switchable input ranges 200 to 50KΩ, wide switchable output ranges over 20 standard process ranges
- Accuracy 0.1% F.S.
- Input/output isolation 1.6KVdc

1. MODEL: PF- ☐-☐☐ ☐-☐-☐N →(Non-programmable)

KAP	Non-Isolating (input/output)
KBP	Isolating (input/output)

NO	Ranges RL~RH
10	0 ~ 10%
11	0 ~ 15%
12	0 ~ 20%
13	0 ~ 25%
14	0 ~ 30%
15	0 ~ 40%
16	0 ~ 50%
17	0 ~ 60%
18	0 ~ 70%
19	0 ~ 80%
20	0 ~ 90%
21	0 ~ 100%
22	5 ~ 95%
23	10 ~ 90%
24	10 ~ 100%
99	SPECIFIED

• Exciting voltage 2.5VDC (≤12.5mA)

NO	Output Ranges
A	0 - 0.5 V
B	0 - 1 V
C	0 - 2 V
D	0 - 4 V
E	0 - 5 V
F	1 - 5 V
G	0 - 8 V
H	0 - 10 V
I	2 - 10 V
J	0 - 1 mA
K	0 - 2 mA
L	0 - 5 mA
M	1 - 5 mA
N	0 - 10 mA
O	0 - 16 mA
P	0 - 20 mA
Q	4 - 20 mA
R	SPECIFIED

NO	Aux. Power
1	AC 110V (50/60Hz)
2	AC 220V (50/60Hz)
3	DC 24V
4	DC 48V
5	DC 110V
6	DC 220V
7	AC 90~260V
9	SPECIFIED

- ±20% of rate, less 2.5VA for AC input
- ±20% of rate, less 2WATT for DC input
- Switchable 110V/220V by jump internally
- Less 2.5VA for AC switching input

2. Specification

- Accuracy : 0.1% F.S. (23±5°C)
- Output ripple (p-p) : <0.1% F.S.
- Temp. coefficient : 100ppm/°C (0-50°)
- Dielectric strength : 1.5KVac/1 min. (power/input/output)
  1600 Vdc (input/output)
- Output drive capability : ≤10mA for voltage mode
  ≤10V for current mode
- Response time : ≤250ms (0~90%)
- Operating condition : 0~55°C (humidity 20~95% RH non-condensed)
- Storage condition : 0~70°C (humidity 20~95% RH non-condensed)
- Construction : Socket/plug-in type with barrier terminals

3. Function switches (S2, S3, S4)

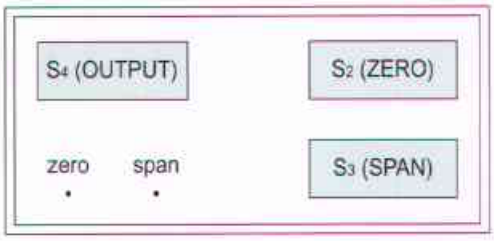

• S2 → Input range offset (ZERO) selection

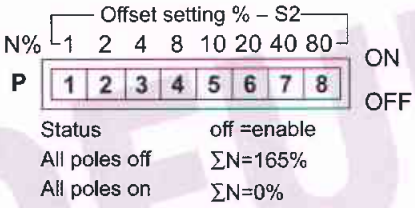

• S3 → Input range span (GAIN) selection

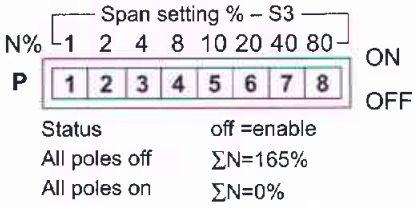

• S4 → P_1-P_2-P_3-P_4-P_5-P_6 output range selection
P_7-P_8 output mode: voltage/current selection
★ (ref. output switching table)

POUNDFUL

4. Programming formula

RH/RL: Percent input high / percent input low

- Span → X = [10/(RH-RL)]%
- Offset → Y = (100xRL)%

5. Application

Example : PF-KAP-21Q-1

Input range ..... (RH = 100%, RL = 0%)
Output ..... (DC 4-20mA)
Power ..... (AC 110V)

- (Span) X = [10/(100%-0%)]%
  = 10%
- (Offset) Y = (100x0%)%
  = 0%

- S2 → 1 2 3 4 5 6 7 8 ON / OFF
  (All poles on → ΣN=0%)

- S3 → 1 2 3 4 5 6 7 8 ON / OFF
  (P_5-off & the rest on → ΣN=10%)

- S4 → 1 2 3 4 5 6 7 8 ON / OFF
  (P_5-P_7-P_8-off & the rest on)

6. Input switching table (S2, S3)

(switching status 1 = on; 0 = off)

Input Range	S2 (ZERO) 1-2-3-4-5-6-7-8	S3 (SPAN) 1-2-3-4-5-6-7-8
0 ~ 10%	1-1-1-1-1-1-1-1	1-1-1-1-1-0-1-0
0 ~ 15%	1-1-1-1-1-1-1-1	* 0-0-0-1-1-0-0-1
0 ~ 20%	1-1-1-1-1-1-1-1	1-1-1-1-0-1-0-1
0 ~ 25%	1-1-1-1-1-1-1-1	1-1-1-1-1-1-0-1
0 ~ 30%	1-1-1-1-1-1-1-1	* 0-0-1-1-0-0-1-1
0 ~ 40%	1-1-1-1-1-1-1-1	0-1-0-1-1-0-1-1
0 ~ 50%	1-1-1-1-1-1-1-1	1-1-1-1-1-0-1-1
0 ~ 60%	1-1-1-1-1-1-1-1	* 0-0-0-1-0-1-1-1
0 ~ 70%	1-1-1-1-1-1-1-1	* 1-1-0-1-0-1-1-1
0 ~ 80%	1-1-1-1-1-1-1-1	* 0-0-1-1-0-1-1-1
0 ~ 90%	1-1-1-1-1-1-1-1	* 0-1-1-1-0-1-1-1
0 ~ 100%	1-1-1-1-1-1-1-1	1-1-1-1-0-1-1-1
5 ~ 95%	0-1-0-1-1-1-1-1	* 0-1-1-1-0-1-1-1
10 ~ 90%	1-1-1-1-0-1-1-1	* 0-0-1-1-0-1-1-1
10 ~ 100%	1-1-1-1-0-1-1-1	0-1-1-1-0-1-1-1

* recalibration to obtain linear output

7. Output switching table (S4)

(switching status 1 = on; 0 = off)

Output Range	O/P Range 1-2-3-4-5-6	O/P Mode 7-8
0 ~ 0.5V	0-1-1-1-1-0	1-1
0 ~ 1V	1-0-1-1-1-0	1-1
0 ~ 2V	1-1-0-1-1-0	1-1
0 ~ 4V	1-1-1-0-1-0	1-1
0 ~ 5V	1-0-1-0-1-0	1-1
1 ~ 5V	1-1-1-0-1-1	1-1
0 ~ 6V	1-1-0-0-1-0	1-1
0 ~ 8V	1-1-1-1-0-0	1-1
0 ~ 10V	1-1-0-1-0-0	1-1
2 ~ 10V	1-1-1-1-0-1	1-1
0 ~ 1mA	0-1-1-1-1-0	0-0
0 ~ 2mA	1-0-1-1-1-0	0-0
0 ~ 5mA	0-1-0-1-1-0	0-0
1 ~ 5mA	1-1-0-1-1-1	0-0
0 ~ 10mA	1-0-1-0-1-0	0-0
2 ~ 10mA	1-1-1-0-1-1	0-0
0 ~ 16mA	1-1-1-1-0-0	0-0
0 ~ 20mA	1-1-0-1-0-0	0-0
4 ~ 20mA	1-1-1-1-0-1	0-0

8. Terminal connection

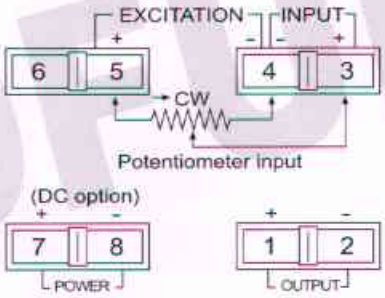

9. Dimension:

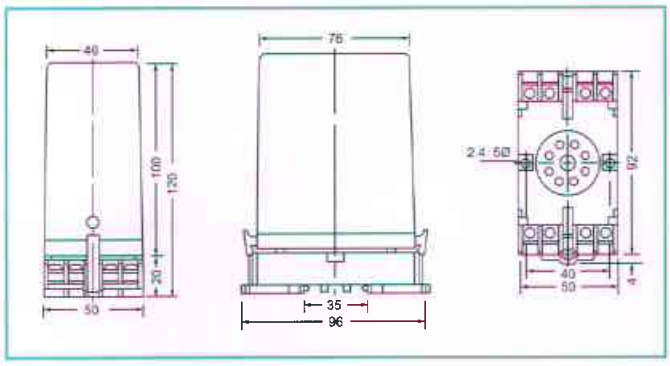

Note: 1. Socket drawing type
2. Mounting: either rail mounting or general screw mounting

POUNDFUL

PROGRAMMABLE LOAD CELL TRANSMITTER

FEATURES

- Field-rangeable. Wide switchable exciting voltages 5~12V,
  Wide switchable input ranges 3mV to 90mV
  Wide switchable output ranges over 20 standard process ranges
- Input offset 85%, input gain 165%
- Accuracy 0.1% F.S.
- Input/output isolation 1.6KVdc

1. MODEL: PF - [ ] - [ ] [ ] [ ] - [ ] - [N] → (Non-programmable)

LAP	Non-Isolating (input/output)
LBP	Isolating (input/output)

NO	Input Ranges
A	0 ~ 3 mV
B	0 ~ 4 mV
C	0 ~ 5 mV
D	0 ~ 6 mV
E	0 ~ 8 mV
F	0 ~ 10 mV
G	0 ~ 12 mV
H	0 ~ 15 mV
I	0 ~ 18 mV
J	0 ~ 20 mV
K	0 ~ 24 mV
L	0 ~ 25 mV
M	0 ~ 27 mV
N	0 ~ 30 mV
O	0 ~ 50 mV
P	0 ~ 60 mV
Q	0 ~ 90 mV
R	SPECIFIED

NO	Exciting
1	5.0V
2	10.0V
3	12.0V
4	15.0V (optional)
9	SPECIFIED

* Max. output current 50mA

NO	Output Ranges
A	0 ~ 0.5 V
B	0 ~ 1 V
C	0 ~ 2 V
D	0 ~ 4V
E	0 ~ 5 V
F	1 ~ 5 V
G	0 ~ 8 V
H	0 ~ 10 V
I	2 ~ 10 V
J	0 ~ 1 mA
K	0 ~ 2 mA
L	0 ~ 5 mA
M	1 ~ 5 mA
N	0 ~ 10 mA
O	0 ~ 16 mA
P	0 ~ 20 mA
Q	4 ~ 20 mA
R	SPECIFIED

NO	Aux. Power
1	AC 110V (50/60Hz)
2	AC 220V (50/60Hz)
3	DC 24V
4	DC 48V
5	DC 110V
6	DC 220V
7	AC 90~260V
9	SPECIFIED

- ±20% of rate, less 3.5VA for AC input
- ±20% of rate, less 3WATT for DC input
- Switchable 110V/220V by jump internally
- Less 3.5VA for AC switching input

POUNDFUL

2. Specification

- Accuracy : 0.1% F.S. (23±5°C)
- Output ripple (p-p) : <0.1% F.S.
- Temp. coefficient : 100ppm/°C (0-50°C)
- Dielectric strength : 1.5KVac / 1min. (power/input / output)
  1600Vdc (input/output)
- Output drive capability : ≤10mA for voltage mode
  ≤10V for current mode
- Response time : ≤250 ms (0-90%)
- Operating condition : 0~55°C (20 to 95% RH non-condensed)
- Storage condition : 0~70°C (20 to 95% RH non-condensed)
- Construction : Socket/plug-in type with barrier terminals

3. Function switches (S1, S2, S3, S4)

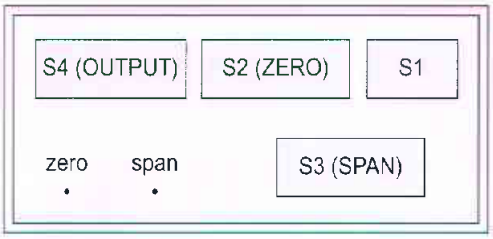

- S1 → input exciting voltage

P	1	2	3	4
	DC5V	DC10V	DC12V	

ON
OFF

(Status on enable 1 = on; 0 = off)

• S2 → P_1 input offset polarity selection
P_2-P_3-P_4-P_5-P_6-P_7-P_8 input range offset (ZERO)selection

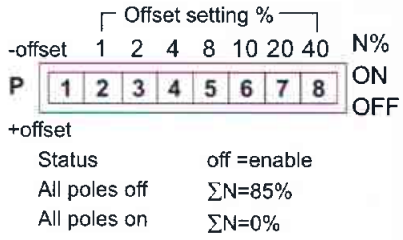

• S3 → Input range Span (GAIN) selection

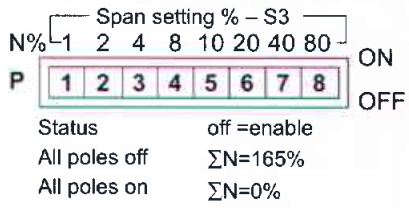

• S4 → P_1-P_2-P_3-P_4-P_5-P_6 output range selection
P_7-P_8 output mode: voltage/current selection
★ (ref. output switching table)

4. Programming formula

VH/VL: input high / input low (unit: mV)

• Span → X = [500 (VH-VL)]%
• Offset → Y = (VL)%

Note: on field application, the required offset at no load status just switching S_2 of 1% = 1mV offset

5. Application

Example : PF-LBP-J2H-1

Exciting ..... (DC10V)
Input range ..... (VH - 20mV, VL - 0mV)
Output ..... (DC 0-10V)
Power ..... (AC 110V)

• (Span) X = [500/(20-0)]% = 25%
• (Offset) Y = (0)% = 0%

• S1 → 1 2 3 4 ON OFF
(P_2-on & the rest off)

• S2 → 1 2 3 4 5 6 7 8 ON OFF
(All poles on → ΣN=0%)

• S3 → 1 2 3 4 5 6 7 8 ON OFF
(P_1-P_3-P_6-off & the rest on → ΣN=25%)

6. Input switching table (% of gain) (S3)

(switching status off = enable; 1 = on; 0 = off)

Input Range (VH-VL)	S3 1-2-3-4-5-6-7-8
3 mV	* 0-0-0-0-0-0-0-0
4 mV	0-1-0-1-1-1-0-0
5 mV	1-1-1-1-1-0-1-0
6 mV	* 0-0-1-1-1-1-1-0
8 mV	* 0-0-1-1-1-0-0-1
10 mV	1-1-1-1-0-1-0-1
12 mV	* 1-0-1-1-1-1-0-1
15 mV	* 0-0-1-1-0-0-1-1
18 mV	* 1-1-1-0-1-0-1-1
20 mV	0-1-0-1-1-0-1-1
24 mV	* 0-1-1-1-1-0-1-1
25 mV	1-1-1-1-1-0-1-1
27 mV	* 0-1-1-0-0-1-1-1
30 mV	* 0-0-0-1-0-1-1-1
36 mV	* 1-1-0-1-0-1-1-1
40 mV	* 0-0-1-1-0-1-1-1
50 mV	1-1-1-1-0-1-1-1
60 mV	* 1-1-1-0-1-1-1-1
90 mV	* 1-0-0-1-1-1-1-1

• recalibration to obtain linear output

7. Output switching table (S4)

(switching status 1 = on; 0 = off)

Output Range	O/P Range 1-2-3-4-5-6	O/P Mode 7-8
0 ~ 0.5V	0-1-1-1-1-0	1-1
0 ~ 1V	1-0-1-1-1-0	1-1
0 ~ 2V	1-1-0-1-1-0	1-1
0 ~ 4V	1-1-1-0-1-0	1-1
0 ~ 5V	1-0-1-0-1-0	1-1
1 ~ 5V	1-1-1-0-1-1	1-1
0 ~ 6V	1-1-0-0-1-0	1-1
0 ~ 8V	1-1-1-1-0-0	1-1
0 ~ 10V	1-1-0-1-0-0	1-1
2 ~ 10V	1-1-1-1-0-1	1-1
0 ~ 1mA	0-1-1-1-1-0	0-0
0 ~ 2mA	1-0-1-1-1-0	0-0
0 ~ 5mA	0-1-0-1-1-0	0-0
1 ~ 5mA	1-1-0-1-1-1	0-0
0 ~ 10mA	1-0-1-0-1-0	0-0
2 ~ 10mA	1-1-1-0-1-1	0-0
0 ~ 16mA	1-1-1-1-0-0	0-0
0 ~ 20mA	1-1-0-1-0-0	0-0
4 ~ 20mA	1-1-1-1-0-1	0-0

8. Dimension: See other transmitter dimension

9. Terminal connection

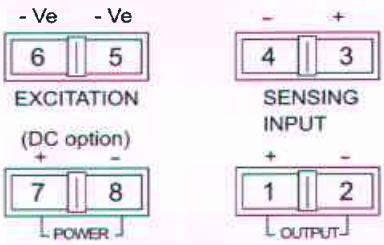

POUNDFUL

PROGRAMMABLE DC TO FREQUENCY TRANSMITTER

FEATURES

- Switchable input ranges 10mV to 200V/200μA to 50mA
- Switchable output ranges (0.00001 Hz-10KHz)
- Accuracy 0.1% F.S.
- Input/output isolation 1.6KVdc

1. MODEL: PF - DFP - ■■ ■ - ■ - [N] → (non-programmable)

NO	Input Ranges Voltage		NO	Input Ranges Current		NO	Output Ranges Hz	NO	Aux. Power
10	0 ~ 10	mV	30	0 ~ 200	μA	A	0-0.00001Hz	1	AC 110V (50/60Hz)
11	0 ~ 20	mV	31	0 ~ 500	μA	B	0-0.0001Hz	2	AC 220V (50/60Hz)
12	0 ~ 50	mV	32	0 ~ 1	mA	C	0-0.001Hz	3	DC 24V
13	0 ~ 100	mV	33	0 ~ 2	mA	D	0-0.01Hz	4	DC 48V
14	0 ~ 200	mV	34	0 ~ 5	mA	E	0-0.1Hz	5	DC 110V
15	0 ~ 500	mV	35	1 ~ 5	mA	F	0-1Hz	6	DC 220V
16	0 ~ 1	V	36	0 ~ 10	mA	G	0-2Hz	7	AC 90~260V
17	-1 ~ +1	V	37	2 ~ 10	mA	H	0-5Hz	9	SPECIFIED
18	0 ~ 2	V	38	0 ~ 20	mA	I	0-10Hz		
19	0 ~ 5	V	39	4 ~ 20	mA	J	0-20Hz		
20	1 ~ 5	V	40	0 ~ 50	mA	K	0-50Hz		
21	-5 ~ +5	V	41	10 ~ 50	mA	L	0-100Hz		
22	0 ~ 10	V	42	20 ~ 4	mA	M	0-200Hz		
23	2 ~ 10	V	43	50 ~ 10	mA	N	0-500Hz		
24	-10 ~ +10	V	99	SPECIFIED		O	0-1KHz		
25	0 ~ 20	V				P	0-5KHz		
26	0 ~ 100	V				Q	0-10KHz		
27	0 ~ 200	V							

- 20~4mA & 50~10mA be reversed of input connection

- ±20% of rate, less 2.5VA for AC input
- ±20% of rate, less 2WATT for DC input
- Switchable 110V/220V by jump internally
- Less 2.5VA for AC switching input

POUNDFUL

2. Specification

- Accuracy : 0.1% F.S. (23±5°C)
- Temp. coefficient : 100ppm/°C (0-50°C)
- Input resistance : ≥100MΩ (≤ 2V ranges)
  ≥1MΩ (> 2V ranges)
  ≤20Ω (current input)
- Maximum input : ≤300 Vrms (> 2V ranges)
  ≤150 Vrms (≤ 2V ranges)
  ≤150 mA (current input)
- Dielectric strength : 1.5KVac / 1min. (power/input/output)
  1600Vdc (input/output)
- Response time : ≤300 ms (0-90%)
- Output : Standard open collector (isolating)
  (DC 30V 60mA)
- Construction : Socket/plug-in type with barrier terminals

3. Function switches (S1, S2, S3, S4, S5)

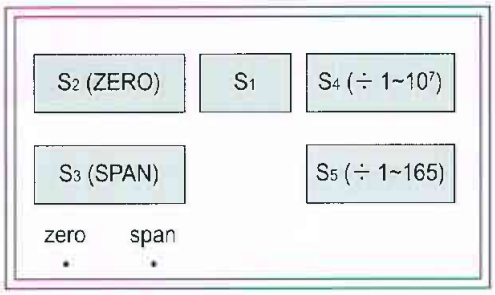

- S1 → P_1-P_2-P_3 input range selection
  P_4 input offset polarity selection

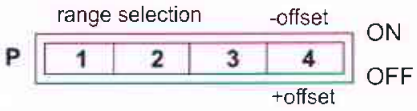

Effective input range D	S1 pole 1 - 2 - 3	Pregain G
200 V ≥ D > 20 V	0 - 1 - 1	0.01
20 V ≥ D > 2 V	0 - 0 - 1	0.1
2 V ≥ D > 200 mV	0 - 0 - 0	1
200 mV ≥ D > 20 mV	1 - 0 - 1	10
20 mV ≥ D > 2 mV	1 - 0 - 0	100
50 mA ≥ D > 5 mA	1 - 1 - 1	1
5 mA ≥ D > 500 μA	1 - 0 - 1	10
500 μA ≥ D > 50 μA	1 - 0 - 0	100

(Status ——— P1-P2-P3 – on = 1; off = 0)

• S2 → Input range offset (ZERO) selection

Offset setting % – S2

N% 1 2 4 8 10 20 40 80

P | 1 | 2 | 3 | 4 | 5 | 6 | 7 | 8 | ON / OFF

Status off =enable
All poles off ΣN=165%
All poles on ΣN=0%

• S3 → Input range offset (GAIN) selection

Span setting % – S3

N% 1 2 4 8 10 20 40 80

P | 1 | 2 | 3 | 4 | 5 | 6 | 7 | 8 | ON / OFF

Status off =enable
All poles off ΣN=165%
All poles on ΣN=0%

• S4, S5 → output range selection
★ (ref. output switching table)

4. Programming formula

VH/VL, AH/AL: input high / input low; G: pregain

Voltage mode unit: volt	Current mode unit: mA
• Span → X=[10/G (VH-VL)]%	• Span → X=[500/G (AH-AL)]%
• Offset → Y=(100 x G x VL)%	• Offset → Y=(2 x G x AL)%

★ Note: 1. Range selection: IVH-VLI should be ≥ 0.1 IVHI...
limited of pregain & range selection

5. Output frequency programming

Defined value

10^0 10^1 10^2 10^3 10^4 10^5 10^6 10^7

M → S4 | 1 | 2 | 3 | 4 | 5 | 6 | 7 | 8 | ON / OFF

(M selection...on enable)(P_1~P_8 only one pin on)

Nx 1 2 4 8 10 20 40 80

N → S5 | 1 | 2 | 3 | 4 | 5 | 6 | 7 | 8 | ON / OFF

(N = ΣNx on: enable)

F(%) = [10000/(M x N)] Mx N = 10000/F(%)

Example: F(%) = 0~0.02Hz

MN=10000/0.02 = 5 x 10^5 → M=10^5, N=5

or → M=10^4, N=50

6. Input switching table (S2, S3, S1)

(switching status 1 = on; 0 = off; X = don't care)

Range	S2 (ZERO) 1-2-3-4-5-6-7-8	S3(SPAN) 1-2-3-4-5-6-7-8	S1 1-2-3-4
0~10 mV	1-1-1-1-1-1-1-1	1-1-1-1-0-1-1-1	1-0-0-X
0~20 mV	1-1-1-1-1-1-1-1	0-1-0-1-1-1-1-1	1-0-0-X
0~50 mV	1-1-1-1-1-1-1-1	1-1-1-1-1-0-1-1	1-0-1-X
0~100 mV	1-1-1-1-1-1-1-1	1-1-1-1-0-1-1-1	1-0-1-X
0~200 mV	1-1-1-1-1-1-1-1	0-1-0-1-1-1-1-1	1-0-1-X
0~500 mV	1-1-1-1-1-1-1-1	1-1-1-1-1-0-1-1	0-0-0-X
0~1 V	1-1-1-1-1-1-1-1	1-1-1-1-0-1-1-1	0-0-0-X
-1~1 V	1-1-1-1-1-0-1-0	0-1-0-1-1-1-1-1	0-0-0-0
0~2 V	1-1-1-1-1-1-1-1	0-1-0-1-1-1-1-1	0-0-0-X
0~5 V	1-1-1-1-1-1-1-1	1-1-1-1-1-0-1-1	0-0-1-X
1~5 V	1-1-1-1-0-1-1-1	0-1-0-1-1-0-1-1	0-0-1-1
-5~5 V	1-1-1-1-0-1-0-1	1-1-1-1-0-1-1-1	0-0-1-0
0~10 V	1-1-1-1-1-1-1-1	1-1-1-1-0-1-1-1	0-0-0-X
2~10 V	1-1-1-1-1-0-1-1	0-0-1-1-0-1-1-1	0-0-1-1
-10~10 V	1-1-1-1-1-0-1-0	0-1-0-1-1-1-1-1	0-0-1-0
0~20 V	1-1-1-1-1-1-1-1	0-1-0-1-1-1-1-1	0-0-1-X
0~50 V	1-1-1-1-1-1-1-1	1-1-1-1-1-0-1-1	0-1-1-X
0~100 V	1-1-1-1-1-1-1-1	1-1-1-1-0-1-1-1	0-1-1-X
0~200 V	1-1-1-1-1-1-1-1	0-1-0-1-1-1-1-1	0-1-1-X
0~0.2 mA	1-1-1-1-1-1-1-1	0-1-0-1-1-0-1-1	1-0-0-X
0~0.5 mA	1-1-1-1-1-1-1-1	1-1-1-1-0-1-1-1	1-0-0-X
0~1 mA	1-1-1-1-1-1-1-1	1-1-1-1-0-1-0-1	1-0-1-X
0~2 mA	1-1-1-1-1-1-1-1	0-1-0-1-1-0-1-1	1-0-1-X
0~5 mA	1-1-1-1-1-1-1-1	1-1-1-1-0-1-1-1	1-0-1-X
1~5 mA	1-1-1-1-1-0-1-1	0-0-1-1-0-1-1-1	1-0-1-X
0~10 mA	1-1-1-1-1-1-1-1	1-1-1-1-0-1-0-1	1-1-1-X
2~10 mA	1-1-0-1-1-1-1-1	0-0-1-1-1-0-0-1	1-1-1-1
0~20 mA	1-1-1-1-1-1-1-1	0-1-0-1-1-0-1-1	1-1-1-X
4~20 mA	1-1-1-0-1-1-1-1	0-1-1-1-0-0-1-1	1-1-1-1
10~50 mA	1-1-1-1-1-0-1-1	0-0-1-1-0-1-1-1	1-1-1-1
*20~4 mA	1-1-1-1-1-1-0-1	0-1-1-1-0-0-1-1	1-1-1-0
*50~10 mA	1-1-1-1-1-0-1-0	0-0-1-1-0-1-1-1	1-1-1-0

* 20~4 & 50~10 mA be reversed of input connection

7. Terminal connection

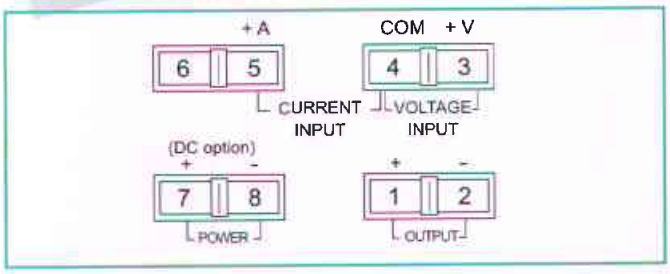

8. Dimension: (Unit: mm)

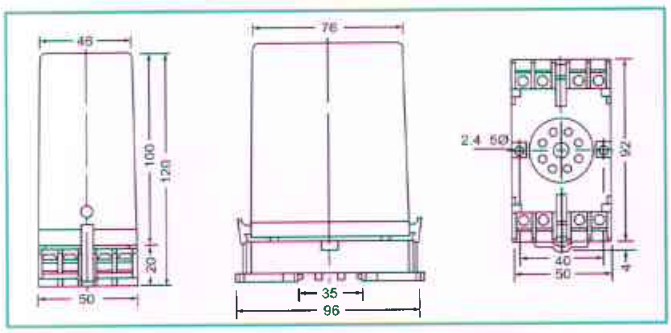

Note: 1. Socket drawing type
2. Mounting: either rail mounting or general screw mounting

FREQUENCY REPEATER TRANSMITTER

FEATURES

- Input range from 0.01Hz to 80KHz
- Input/output isolation 1.6KVac

1. MODEL: PF - FRF - ■ - ■ ■ - ■

NO	Input Level
1	Pulse (TTL) (5V)
2	Pulse (NPN) (12V)
3	Pulse (PNP) (12V)
4	AC 0.1~6V

NO	Output 1
N	None
A	Pulse 5V
B	Pulse 24V
R	SPECIFIED

NO	Output 2
N	None
A	Pulse 5V
B	Pulse 24V
R	SPECIFIED

NO	Aux. Power
1	AC 110V (50/60Hz)
2	AC 220V (50/60Hz)
3	DC 24V
4	DC 48V
5	DC 110V
6	DC 220V
7	AC 90~260V
9	SPECIFIED

2. Specification

- Count input type : Current sinking or current sourcing
- Sensor power : 12VDC
- Temp. coefficient : 100ppm/°C
- Dielectric strength : 1.6KVac/1min. (power/input/output)
- Operating condition : 0~55°C (20~95% RH non-condensed)
- Storage condition : 0~70°C (20~95% RH non-condensed)
- Construction : Socket/plug-in type with barrier terminals
- Auxiliary power : AC 110V or 220V (50/60Hz) ±20% 3.5VA

3. Terminal connection

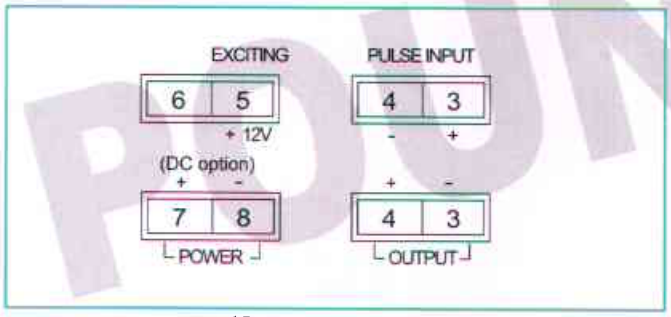

(One repeat output)

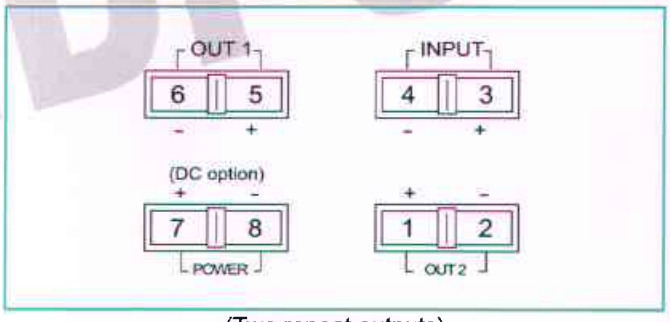

(Two repeat outputs)

4. Dimension: (Unit: mm)

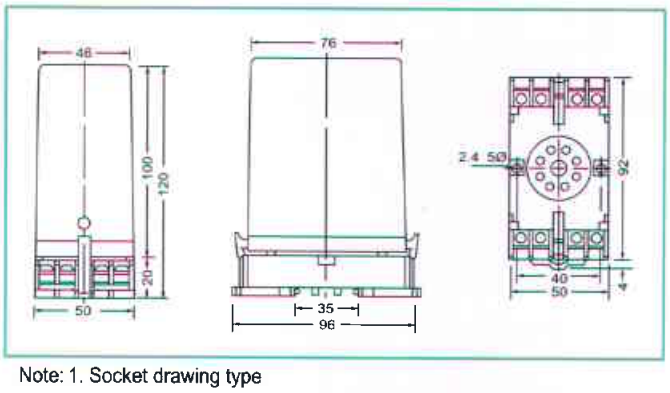

Note: 1. Socket drawing type
2. Mounting: either rail mounting or general screw mounting

POUNDFUL